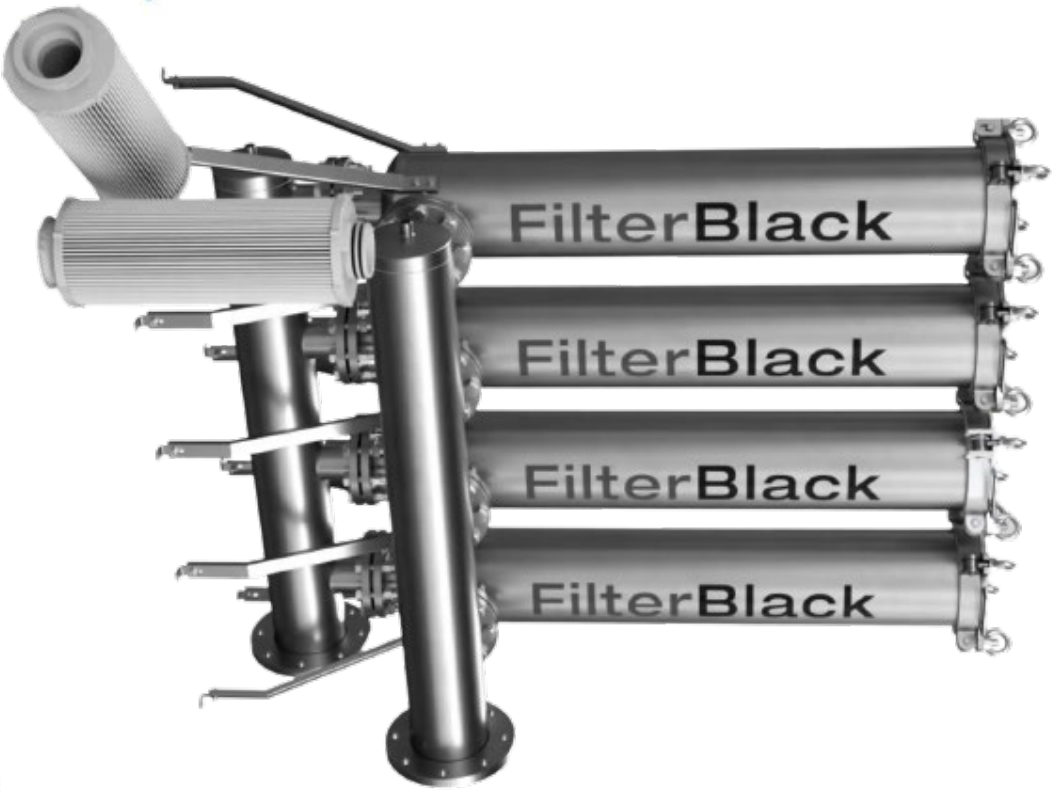

FilterBlack

Housings for filter cartridges

Model: FilterBlack FBK

FilterBlack housing and filtration cartridges

The market is now saturated with *standard*, poor quality filter cartridges of dubious origin, produced by companies with limited expertise and marketed to resellers, water treatment plant manufacturers and end-users at very low prices.

In particular, filter cartridges are marketed to retailers, installers, and end users at lower prices, which consistently take customers away from water treatment plant manufacturers by preventing them from getting a fair economic return from selling filter cartridges on their systems.

Everblue has been studying, designing and manufacturing housings filter cartridge and related filter elements in Italy since 2001 using top-quality European materials. High quality standards respected and guaranteed at all stages ensure innovative and reliable products.

MADE IN ITALY

MADE IN EUROPEAN UNION

FilterBlack housings and filter cartridges represent, technically and economically, the best solution available on the market for the construction of high flow filtration systems as pretreatment of reverse osmosis plants.

Their uniqueness represents a natural trade protection from the attacks of standard products and their undisputable quality always ensures better performance than any other alternative.

high flow rate in small footprint

FilterBlack housings

FilterBlack housings are produced in two different heights:

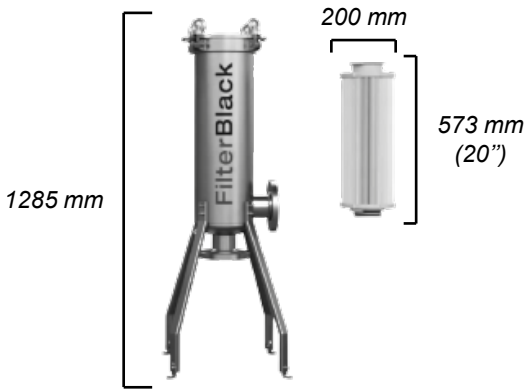

FilterBlack 1x20"
Contains 1 cartridge of 20"
Flow rate up to 18 m³/h

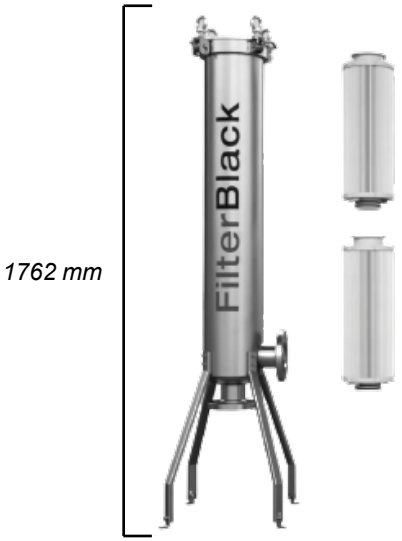

FilterBlack 2x20"
Contains 2 cartridges of 20"
Flow rate up to 36 m³/h

FilterBlack housings guarantee:

High flow

Products with lengths (1x20" and 2x20"), diameters (8"- 200mm) and connections (3"- DN80) such as to ensure flow rates from 18 m3/h to 36 m3/h

High pressure resistance

Possibility to operate up to 10 bar

Corrosion resistance

Guarantee of long life thanks also to the treatment of micro shot peening

FilterBlack: operating

1 The water to be filtered enters through the inlet of the **FilterBlack** container without impacting directly on the filter cartridge body, thanks to internal housing geometry.

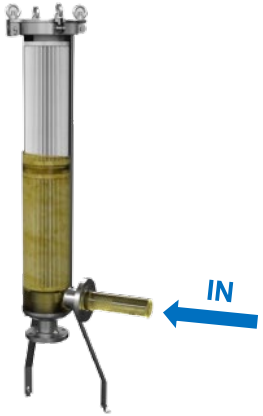

2 The water is distributed as shown, evenly over the entire surface of the filter cartridge, ensuring a constant filtration efficiency over time.

3 The water then passes from the outside to the inside of the filter cartridge that in this way will retain the foreign particles and suspended solids contained in it.

4 Once the water has finished its path inside the **FilterBlack** filter and its cartridges, it is free to flow through the fully purified and filtered outlet cap.

FilterBlack: quick and easy cartridge replacement

A Insert **FilterBlack** cartridges one on top of the other, then rotate clockwise until the end of the stroke:

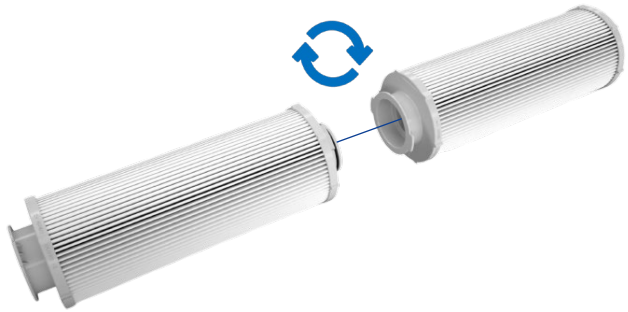

B Insert the complete handle into the cartridge block, then turn clockwise until the end of the stroke:

C Insert the cartridge block, complete with handle, into the body of the **FilterBlack** container (1). Next, close the head of the container and screw the eyebolts clockwise until the end of the course (2):

1.

2.

*The extraction of the cartridges from the **FilterBlack** container takes place by performing the operations in reverse with respect to insertion. Inserting and removing cartridges is very easy and takes only a couple of minutes.*

Why choose FilterBlack?

Uniqueness

FilterBlack housings are **unique** products because:

- They are the combination of the best technologies currently available on the market.
- They are made to be fitted 3 types of cartridges (depth, pleated and washable).
- They are produced in 2 different heights that are easily assembled into batteries with special assembly kits (manifolds).

Simplicity

FilterBlack housings are **easy** to use:

- A single operator opens and closes the FilterBlack container manually in a few minutes.
- The FilterBlack filter cartridges are quickly inserted and removed by quick coupling with each other thanks to the bayonet connection.

Why choose FilterBlack: modularity

FilterBlack housings and cartridges allow the construction of ideal **modular** batteries to meet all flow rates at reduced costs.

FilterBlack
FBK-2RS
Flow rate up to 72 m³/h

FilterBlack
FBK-3RS
Flow rate up to 108 m³/h

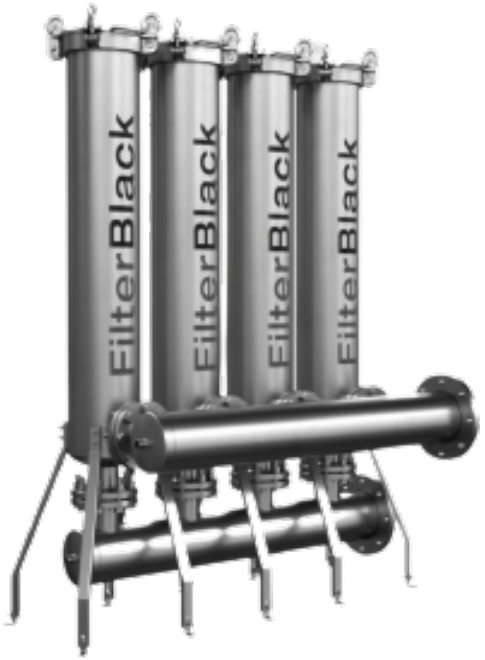

FilterBlack
FBK-4RS
Flow rate up to 144 m³/h

FilterBlack filtration cartridges

FilterBlack filtration cartridges are made in three different version to meet all filtration requirements:

Depth filtration cartridges

N95BL
Polypropylene Melt Blown

2 double gradient

High filter volume

High loading capacity of particles with heterogeneous size

Pleated filtration cartridges

PP95BL
Polypropylene Pleated

5 Layers

High filter surface

High loading capacity of particles with homogeneous size

Washable filtration cartridges

TPL95BL
Pleated Polyester Net
TekBlue

filstar inside PATENTED

Washable

High particle loading capacity with possibility of reuse

ECO FRIENDLY

FilterBlack filtration cartridges guarantee:

Long life

The high filtering surface/volume allows a significant storage capacity of suspended solids that is equivalent to a long service life and a consequent reduction in operating costs

High flow

The large surface/volume allows high flow rates to be treated using filter housings and batteries having small footprints

High efficiency

The high particle removal efficiency of the filter septa enables the production of quality water for all usage needs

FilterBlack N95BL depth filtration cartridges

everblue.it

Depth filtration cartridges

N95BL
Polypropylene Melt Blown

double gradient

High filter volume

High loading capacity of particles with heterogeneous size

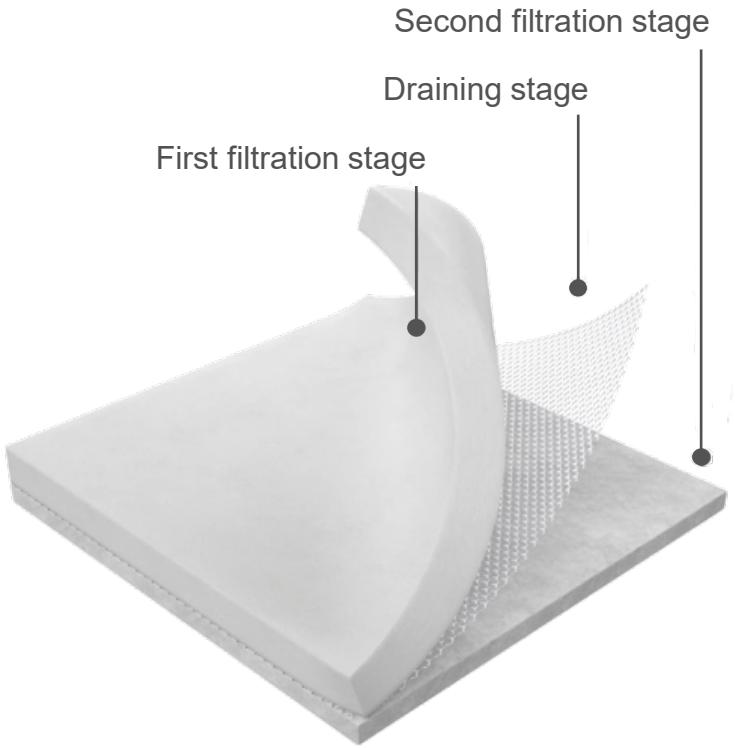

The **FilterBlack N95BL** cartridges are made of extruded polypropylene with internal support and rigid molded polypropylene terminals.

The **FilterBlack N95BL** cartridges guarantee very high load capacity thanks to the **double gradient** double filtering layer.

The first layer accumulates the coarsest particles while the second layer performs the final finishing by retaining the smaller particles.

These cartridges are ideal for treating non-refined water with high presence of suspended solids (up to a maximum of 1 ppm TSS) with heterogeneous particle distribution.

FilterBlack N95BL cartridges are produced in the following filtration grades: 1-10 µ, 5-20 µ, 20-50 µ, 50-90 µ with 95% removal efficiency (99.98% absolute on request).

FilterBlack PP95BL pleated filtration cartridges

Pleated filtration cartridges

PP95BL
Polypropylene Pleated

5 Layers

High filter surface

High loading capacity of particles with homogeneous size

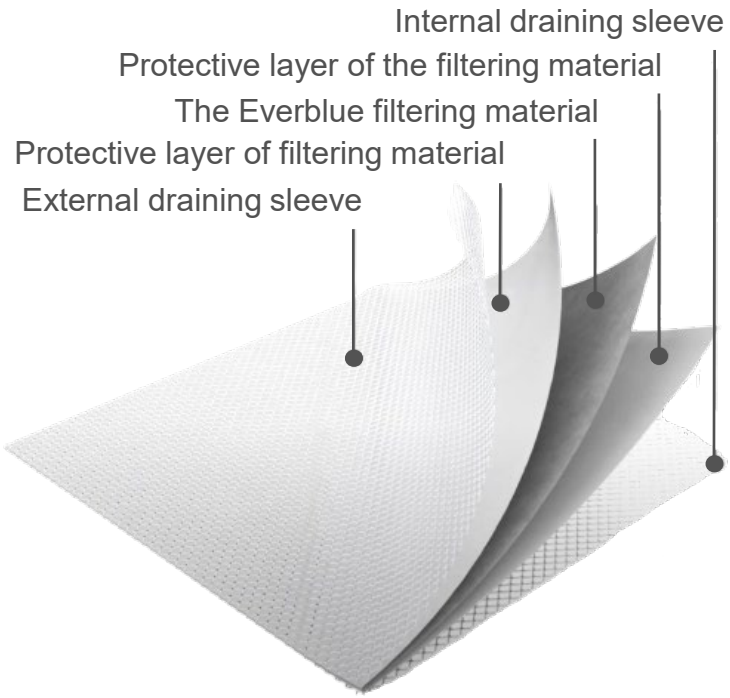

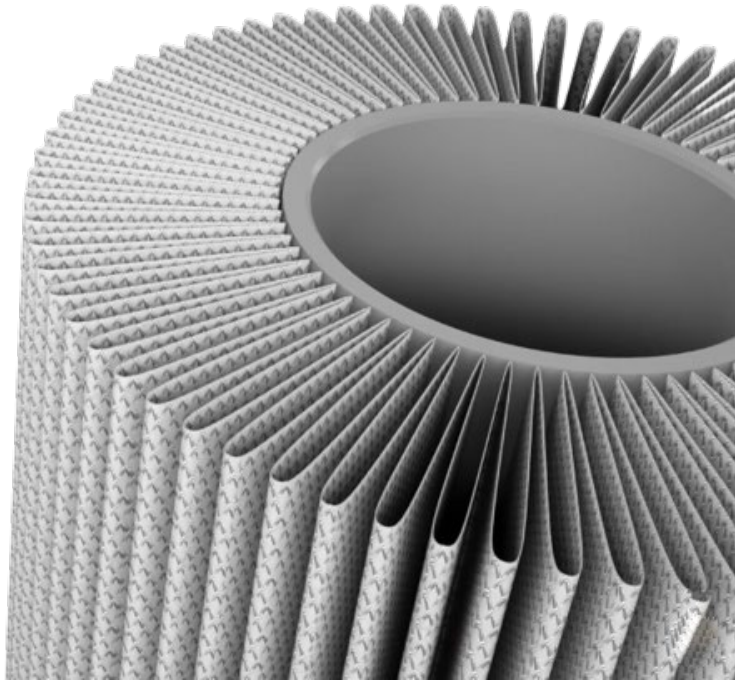

FilterBlack PP95BL cartridges consist of: 3-layer polypropylene filtering septum supported by an external PP drainage net and an internal PP drainage net (5 Layers filtering system); internal support and moulded rigid polypropylene terminals. The external drainage net of the 5 Layers filter system prevents the crease from closing due to the increase in pressure due to the dirty filter material, always ensuring the constant outflow of filtered water towards the internal support of the cartridge.

FilterBlack PP95BL cartridges, thanks to the special filter system 5 Layers, guarantee a longer life compared to the normal filter cartridges on the market having the same surface.
These cartridges are ideal for the final finishing of water containing homogeneous particle sizes (up to a maximum of 1 ppm TSS).

FilterBlack PP95BL cartridges are produced in the following filtration grades: 1, 5, 10, 20, 50 µ with 95% removal efficiency (99.98% absolute on request).

FilterBlack TPL95BL washable filtration cartridges

everblue.it

Washable filtration cartridges

TPL95BL
Pleated Polyester Net
TekBlue

filstar inside PATENTED

Washable

High particle loading capacity with possibility of reuse

ECO FRIENDLY

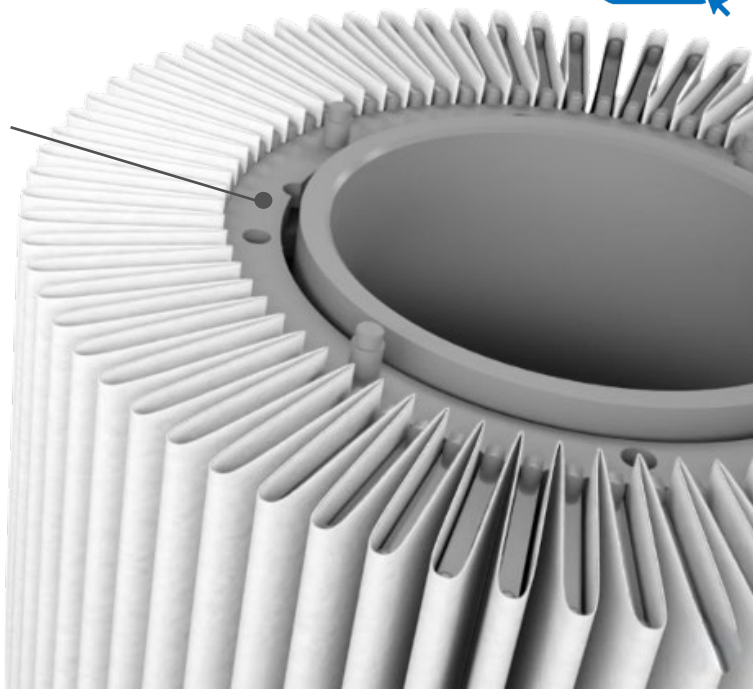

The FilterBlack TPL95BL cartridges consist of: moulded rigid internal support, moulded rigid polypropylene terminals and TekBlue pleated polyester mesh filtering panel coupled to a PP drainage net. The two nets are always kept perfectly open and in place by a special rigid polypropylene structure: the system filstar inside

The system filstar inside prevents the closing of the fold due to the increase in pressure as a result of the dirty filter material, always ensuring the constant outflow of filtered water to the inside of the cartridge. Also the rigidity of the folds guaranteed by system filstar inside allows easy and effective washability even with low pressure water jets (suggested pressure 2 bar – max 3 bar).

FilterBlack TPL95BL cartridges, with patented system filstar inside and TekBlue filter net, ***are guaranteed to be washed at least 500 times***, thus allowing a very high cost savings.
These cartridges are ideal for the filtration of water that has a high presence of suspended solids (up to a maximum of 1 ppm TSS) with a heterogeneous distribution of particles.

FilterBl FilterBlack e TPL95BL cartridges are produced in the following filtration grades: 20, 50 µ with 95% removal efficiency.

More info

Data Sheet
FilterBlack

Video
FilterBlack

Case History
FilterBlack

Company authorized to the use of the brand

double gradient

filstar inside

5 layers

Contact Us

Everblue

Via Alberto Zanrè, 16 - Loc. Gotra 43051 Albareto (PR)
www.everblue.it
+3905251920100
info@everblue.it

High Confidential | 26/08/2024 | Everblue srl | All rights reserved, also regarding any disposal, exploitation, reproduction, editing, distribution, as well as in the event of applications for industrial property rights.