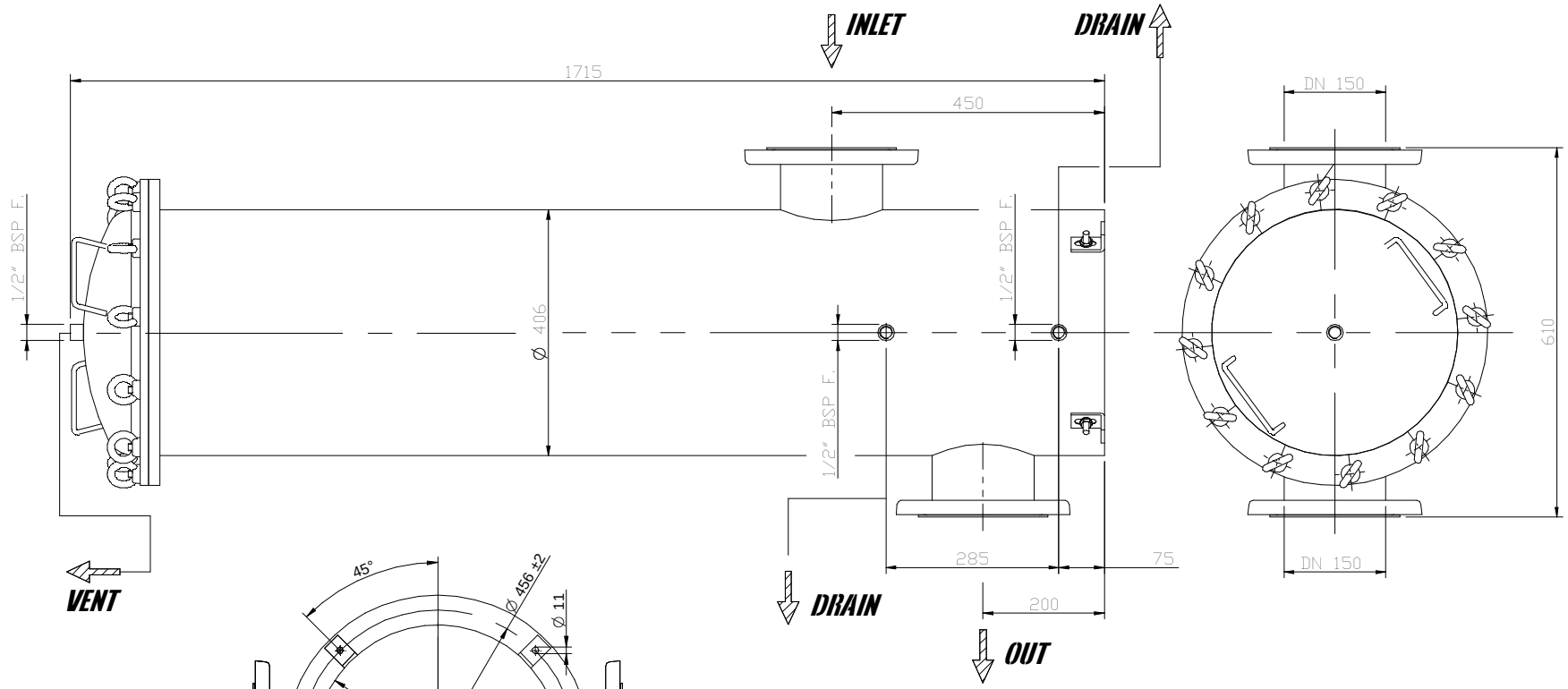

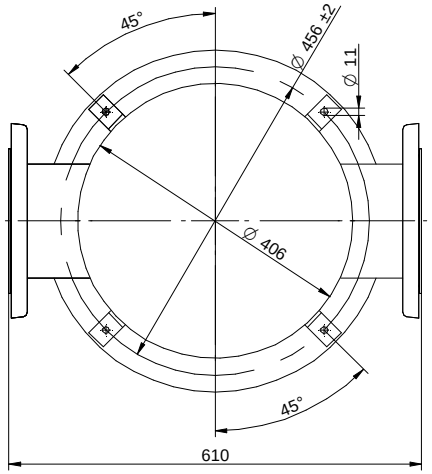

POS.	CODE	DENOMINATION	QUANTITY	MATERIALS

ALL DIMENSIONS MILLIMETERS	ALL SURFACES FINISH ROUGHNESS IN Ra µm	GENERAL TOLLERANCES UNLESS OTHERWISE SPECIFIED UNI-EN 22768-mK UNI-EN 22768-c
NOT QUOTED FILLET R=0.3 CHAMFER 0.3x45°		

SIMILAR TO	CRITICAL INDEX	WORK ORDER	JOB	QUANTITY	DRAWN DATE 10/01/2013 BY UT	APPROVED DATE BY

DENOMINATION	CODE	REV.
FILTRO FMG-22 22x40"	FMG316LST2240DP_I	

Everblue

MODIFICATION	DATE	BY

BARCODE

SCALE	PROJECTION
1:1	

CONTENTS - ANY INFORMATION IS CONFIDENTIAL
REPRODUCTION IS PROHIBITED - ALL RIGHTS RESERVED ACCORDING TO THE LAW